G-Series Cooler
Instruction Manual

GVG-26c

Models: Listed on Inside Cover



idw
www.idw.global

G-Series Cooler
Instruction Manual

GVG-26c

Models:
GVG-26-CV934B
GVG-26-CV934B-HC
GVG-26-CBV934B

TABLE OF CONTENTS

Parts & Identification 4
Safety Precautions 5
Installation 6
  Ambient Environment 6
  Preparation Prior to Operation 6
  Electrical Requirements 6
Leveling 7
Shelving Installation 7
Interior Light Replacement 8
Canopy Light Replacement 8
Canopy Graphic Replacement 9
Setting Up Power Cord Holder 9
Startup, Operation & Temperature Adjustment 10
Uploading Video Content 10
Maintenance 11
  Condenser 11
  Cleaning 11
Specifications 12
Flammable Refrigerant Warnings 12
Troubleshooting 13
Circuit 14
Electrical Wiring Diagrams 15

For Future Reference

- This easy-to-use manual will guide you in getting the best use of your cooler.
- Remember to record the model number and the serial number. This information can be found on the inside of your cooler.
- Keep your receipt with this manual for future warranty service.

Model #: _____

Serial #: _____

Date of Purchase: _____

PARTS & IDENTIFICATION

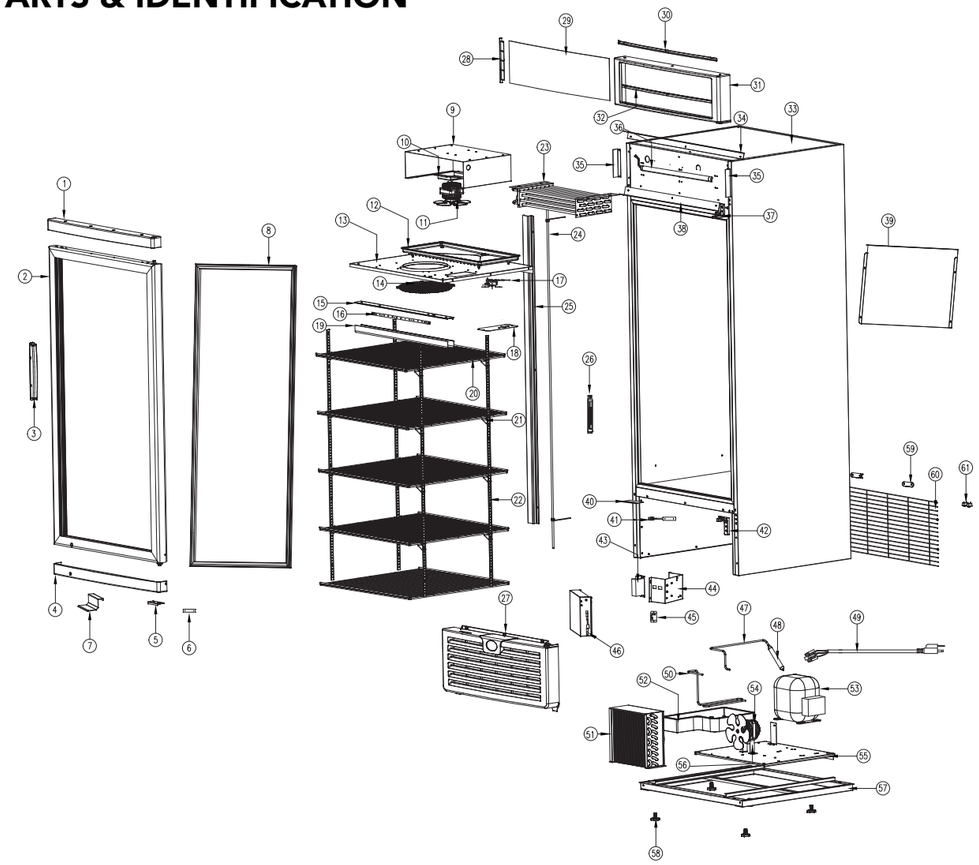

1. Top Plastic Strip of Glass Door
2. LCD Screen Glass Door
3. Door Handle
4. Low Plastic Strip of Glass Door
5. Door Limiter
6. Door Switch on Glass Door
7. Door Support
8. Door Gasket
9. Side Panel
10. Fan Support
11. Evaporating Fan
12. Drip Pan
13. Control Panel
14. Fan Guard
15. Lamp Stand
16. LED Light
17. Thermostat
18. Thermostat Panel
19. LED Light Cover
20. Shelf (6)
21. Shelf Clips (24)
22. Pilasters (4)
23. Evaporator
24. Return Pipe
25. Return Pipe Cover
26. Thermometer
27. Grill
28. Inserts
29. Light Canopy Cover
30. Top Strip Inside Light Canopy
31. Canopy Frame
32. Low Strip Inside Light Canopy
33. Foam Cabinet
34. Top Bracket of Light Canopy
35. Left and Right Bracket of Light Canopy (2)
36. LED Light Inside Canopy
37. Top Hinge
38. Lower Bracket of Light Canopy
39. Plenum
40. Support Bracket for Grill
41. Magnetic Switch
42. Lower Hinge
43. Switching Power Supply of LED Light
44. Electric Box
45. Electric Relay
46. Media Player
47. Connecting Tube for Dry Filter
48. Dry Filter
49. Power Cord
50. Connecting Tube for Condenser
51. Condenser
52. Drain Pan
53. Compressor
54. Condenser Fan
55. Upper Baseboard
56. Fan Support
57. Lower Baseboard
58. Leveling Legs (4)
59. Bumper Block (2)
60. Compressor Guard
61. Light Switch (2)

SAFETY INSTRUCTIONS

1. When using this appliance, always follow the basic safety precautions:
2. Read the entire User's Manual before operating this appliance.
3. Use this appliance only for its intended purpose as described in this User's Manual.
4. This appliance must be properly installed in accordance with the installation instructions before being used.
5. IDW requires that a dedicated circuit be used for the unit. Failure to do so voids warranty.
6. Never unplug your cooler by pulling on the power cord. Always grasp the plug firmly and pull it straight out from the outlet.
7. Unplug your appliance before cleaning or making any repairs. ***Note: If for any reason this product requires service, we strongly recommend that a certified technician perform the service.***
8. When disconnecting the power source, wait at least 5 minutes to reconnect the power to avoid damage to the compressor and the cooling system.
9. Immediately repair or replace all electrical cords that have become frayed or otherwise damaged. Do not use a cord that shows cracks or abrasion damage along its length, the plug or the connector end.
10. Do not operate or store your appliance near or around explosive fumes, gasoline or other flammable vapors and liquids.
11. Do not use flammable liquids to clean unit.
12. Setting the temperature control to the 0 position does not remove power to the light circuit, perimeter heaters, or evaporator fans.
13. Do not adjust the temperature control. The temperature control is factory set for maximum performance.

PLEASE SAVE THESE INSTRUCTIONS!

DANGER!

PROPER DISPOSAL OF THE REFRIGERATOR

Pre-Caution, Non-Operating Coolers Should Have:

1. Door removed.
2. Shelves kept in place in order to prevent any small child from climbing inside cooler.

For Proper Disposal of Cooler:
Distributors/retailers need to contact a qualified service technician:

1. To recover all refrigerant from the cooler
2. To remove the compressor or remove the oil from the compressor

Then the distributor/retailer can contact their local metal recycling center to pick up the remaining cabinet, shelves, etc. By law, disposal of hazardous wastes may be subject to fines and imprisonment under the provisions of the environmental regulations. For more information please visit: *http://www.epa.gov/osw/hazard/index.htm*

INSTALLATION

Installation of the cooler must be done according to applicable local codes or equivalent.

Ambient Environment

- Place cooler on an even surface to reduce vibration and noise.
- To transport, do not tilt the cooler beyond a 45 degree angle.
- Do not place cooler in direct sunlight or near any heat sources.
- Do not place cooler in environment temperatures that exceed 80F.
- Do not place cooler in below normal temperatures.
- Do not place cooler in extreme humid environments, this may cause components to rust.
- Do not place cooler near constant running or splattering water, this may cause immediate damage to refrigeration system.
- Must allow at least 4" between rear of cooler and wall for proper ventilation and heat dissipation of cooler.
- Do not place furniture or other articles with sharp edges near the cooler in order to prevent damage to the glass door.
- This cooler is for indoor use.
- Place unit in it's final location, making certain there is adequate ventilation in the room.

  WARNING: Warranty is void if ventilation is insufficient.

Preparation Prior to Operation

- Remove all packaging materials before using cooler. This includes: foam pedestal, adhesive tape (used to fix accessories) and protective gaskets.
- Inspect cooler for concealed damage. Immediately file a claim with the freight carrier if there is damage. IDW is not responsible for damage incurred during shipping.
- Cooler must remain unplugged in an upright position for 1 hour prior to use.
- Clean the interior surface with a soft cloth and lukewarm water before operation.
- Ensure that drain hose or hoses are positioned in the pan.
- Remove plug and cord from inside the lower rear of the cooler.
- The unit should be placed close enough to the electrical supply so that extension cords are not used.

Electrical Requirements

- This model operates with a 110-120V/60Hz power supply. Check the electrical outlet for proper voltage.
- Dedicate one outlet for the use of the cooler.
- Do not use an extension cord or any other multiple connectors as this can lead to compressor failure.
- If the cord is damaged, it must be replaced.
- For your safety, plug the unit into a grounded wall outlet. Please check with a certified electrician for details.

  WARNING: Do not use extension cords.
  WARNING: Compressor warranties are void if compressor burns out due to low voltage.
  WARNING: Power cord ground pin must NOT be removed!

LEVELING

- Set unit in its final location making certain there is adequate ventilation in the room.

  WARNING: Warranty is void if ventilation is insufficient.
- Proper leveling of the cooler is critical to it operating correctly. Condensation removal and door operation are both affected by leveling.
- The cooler should be leveled front to back and side to side with a level.
- Ensure the drain hose or hoses are positioned in the pan.
- Remove the plug and cord from inside the lower rear of the cooler.
- The unit should be placed close enough to the electrical supply so that extension cords are never used.

SHELVING INSTALLATION



Securely insert shelf clips into pilasters

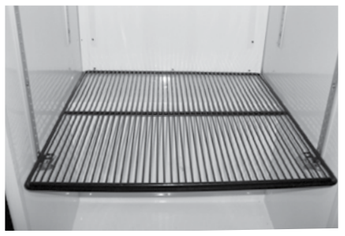

Shelf clips should be level so shelf lays flat

(Maximum load per shelf is 123 lbs)

Display refrigerators can be loaded within the shelf dimensions from the front to back side. They can also be loaded in any space from the bottom to the top interior cabinet. Do not allow product to block the evaporator fan cover because the evaporator fan helps the cooler to ventilate properly.

INTERIOR LIGHT REPLACEMENT

Instructions are as follows:



1 Press two sides of plastic cover by the fingers and remove it.



2 Disconnect the lights.

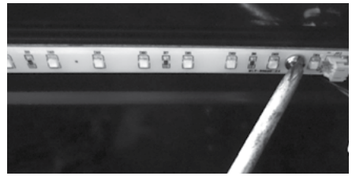

3 Unscrew all screws using a Phillip's screwdriver.



4 Remove LED light strand.



5 To install LED lights follow the above directions in reverse order.



CANOPY LIGHT REPLACEMENT

Instructions are as follows:



1 Unscrew the graphic holder on the left hand side of the canopy.



2 Carefully slide out the entire graphic.



3 Disconnect the light.



4 Hold the LED light, tilt slightly, and then remove it from the bracket..



5 To Install LED lights follow the above directions in reverse order.

CANOPY GRAPHIC REPLACEMENT

Instructions are as follows:



1 Unscrew the graphic holder on the left hand side of the canopy.



2 Carefully slide out the entire graphic.

3 Replace with new graphic.



4 Secure the graphic holder by fastening the screw.

SETTING UP SPACERS & POWER CORD HOLDERS

These coolers are supplied with one set (2 pieces) of Spacers to hold the extra length of Power Cord.

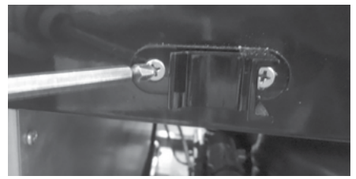

1 Take out the two Spacers and screws supplied in the Accessory Pack shipped with the Cooler.



2 Use a Phillips screwdriver to secure the two Spacers onto the rear of the cooler.

START-UP, OPERATION AND TEMPERATURE ADJUSTMENT

Operation

Prior to stocking cooler with product, it should be operated empty for half an hour.

Switch Operation for Interior Lights & LCD Door Display





Temperature Adjustment

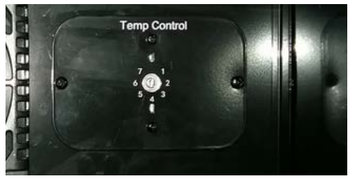

Performance tested position of the thermostat is between 4-6.

Rebooting LCD Door Display

Use the ON/OFF switch located at the bottom left hand side, on the rear of the cabinet, to turn display OFF. Wait at least 30 seconds before switching back ON. The cooler will display a utility screen as it's loading the new content. Once content is 100% loaded it will start playing automatically. This can also be achieved by unplugging the power cord from the wall and plugging back in.

UPLOADING VIDEO CONTENT

Load desired video content on a USB drive and plug into back of cooler. A USB port is located at the bottom left hand side, on the rear of the cabinet, above the ON/OFF switch. The cooler will display a utility screen as it's loading the new content. Once content is 100% loaded it will start playing automatically.



MAINTENANCE

Condenser

It is essential to keep the condenser coils clean and free of dust and debris at all times. It is required to periodically clean the condenser coils with a soft bristle brush or vacuum-cleaner to properly maintain the refrigeration system. Failure to clean the condenser at regular intervals may cause failure of the refrigeration system and could void the warranty.



1 Remove the rubber cap from the front grill.

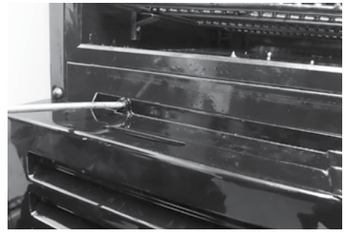

2 Using a small Phillips head screwdriver and remove the screws as shown.



3 The front grill can now be removed by pulling it up.

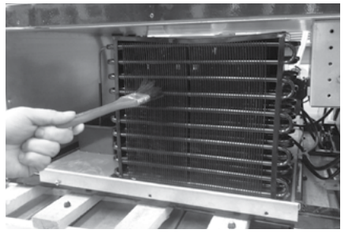

4 Using plastic bristle brush, carefully clean the condenser being aware that coils can bend or be damaged if too much force is used.

5 Replace grill and use the Phillips screwdriver to tighten the screws into place, replace the rubber caps.

Cleaning

- Unplug the cooler before cleaning.
- Use a soft cloth or sponge with soap and water (non-corrosive mild detergent), while cleaning. After cleaning, wipe the cooler using a dry cloth to prevent the cooler from rusting.
- Do not spray water on the cooler, and do not use hard or steel brushes to clean the cooler.
- Do not use organic solvents, boiling water, scrubbing powders or acids while cleaning.
- A drain or waste outlet ***may*** be provided for draining of a display refrigerator. ***If*** a display refrigerator drain is provided for flushing, it will have a minimum internal diameter of 1" (25mm)

If the cooler will be in a non-operational state for a long period of time, clean as instructed above, and keep the door open until interior is dry.

SPECIFICATIONS

MODEL	VOLUME(L)	RATED VOLTAGE	RATED CURRENT	LAMP INPUT POWER	REFRIGERANT
GVG-26-CV934B GVG-26-CV934B-HC GVG-26-CBV934B	22.3ft³	110-120V/60Hz	2.7A	38 W (including LCD Light)	R290/83g
NSF/ASNI-7: Type II Display Refrigerator	A display refrigerator intended for use in an area where the environmental conditions are controlled and maintained so that the ambient temperature does not exceed 80°F (27°C).				



CAUTION FLAMMABLE REFRIGERANT

- **DANGER – Risk Of Fire Or Explosion.** Flammable Refrigerant Used. To Be Repaired Only By Trained Service Personnel. Do Not Puncture Refrigerant Tubing.
- **CAUTION – Risk Of Fire Or Explosion.** Flammable Refrigerant Used. Consult Repair Manual/Owner's Guide Before Attempting To Install or Service This Product. All Safety Precautions Must be Followed.
- **CAUTION – Risk Of Fire Or Explosion.** Dispose Of Properly In Accordance With Federal Or Local Regulations. Flammable Refrigerant Used.
- **CAUTION – Risk Of Fire Or Explosion** Due To Puncture Of Refrigerant Tubing; Follow Handling Instructions Carefully. Flammable Refrigerant Used.
- **CAREFUL** - Handling, moving and operating of the refrigerator or freezer to avoid either damaging the refrigerant tubing, or increasing the risk of a leak.
- **CAUTION** - Component parts shall be replaced with like components and that servicing shall be done by factory authorized service personnel, so as to minimize the risk of possible ignition due to incorrect parts or improper service.

TROUBLESHOOTING

The following are NOT malfunctions:

Situation	Causes
Liquid flowing noise within cooler	• This is the sound of the cooling agent flowing through the pipes.
Refrigeration system is shutdown for longer periods of time while temperature inside is still very low	• This refrigerator is well insulated and can maintain a relatively ambient temperature.
Condensation on door/lid	• This may be due to a high indoor humidity or the cooler's temperature is set too low. Wipe the door dry with a towel.

1. This refrigerator has been designed and manufactured according to National standards. If there are any questions during use, refer to this operation manual to help troubleshoot problems.
2. When disposing of the cooler, please remove the door/lid and lock assembly to avoid children accidentally becoming trapped inside the cooler.

Prior to calling service, check the following:

Issues	Solutions
Cooler is not working properly	Please check power supply: • Check the electrical outlet for power, and that the plug is properly inserted. • Check to see if the circuit breaker is tripped or the fuse is blown. • Check if the condenser is free of dirt and debris. • Check for low voltage
Cooler is not keeping product cool	• Provide ample space between all products to ensure proper circulation of air. • Keep unit away from direct sunlight or other heating source. • Keep the door closed as often as possible. • Be certain the cooler is not touching external objects or walls.
Excessive noise	• Be certain the cooler is placed on a level surface. • Be certain the cooler is not touching external objects or walls.
Compressor turns on and off frequently	• The room temperature is higher than normal. • The door is not closed completely. • The door gasket is not sealed properly. • There is insufficient clearance around the cooler. • The thermostat is not set properly. • The frequency of cycling will be reduced when all of the product reaches the set temperature.

AFTER SALES SERVICE

Any product has the possibility of malfunction. Please observe the cooler's operation and any changes to product being stored. If there are any abnormal cases, refer to the table below. If there is still no change after following the below instructions, please inform our service center in a timely manner to avoid a further loss of the unit.

Information to provide to your qualified service professional:

- Serial number from the interior wall of the cooler
- Coolers' installation address and contact information
- Installation location hours and operation
- Nature of problem
- Any reports of power interruptions
- Recent service or maintenance completed on the cooler
- Has the cooler been relocated from original installation location
- Clear access to the cooler
- Coolers' instruction manual

CIRCUIT DIAGRAM

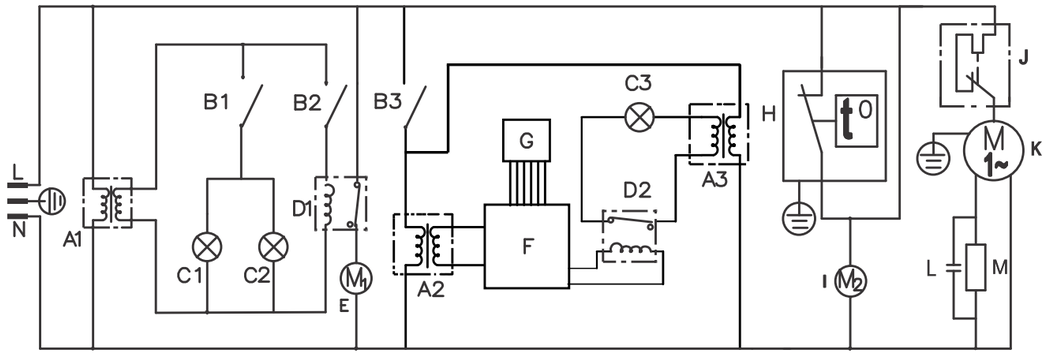

A1:Power Supply for LED Lights &Relay
A2:Power Supply for LCD Screen Controller
A3:Power Supply for LCD Light
B1:On/Off Switch for interior and Canopy Light
B2:Door Switch
B3:LCD Switch
C1:Interior Top LED Light
C2:Canopy LED Light
C3: LCD Light
D1:Relay for Evaporator Fan
D2:Relay for LCD Light
E:Evaporator Fan
F: LCD Screen Controller
G: LCD Screen
H: Thermostat
I: Conderser Fan
J: Overload for Compressor
K:Compressor
L:Compressor Running Capacitor
M:Compressor PTC

ELECTRICAL WIRING DIAGRAM

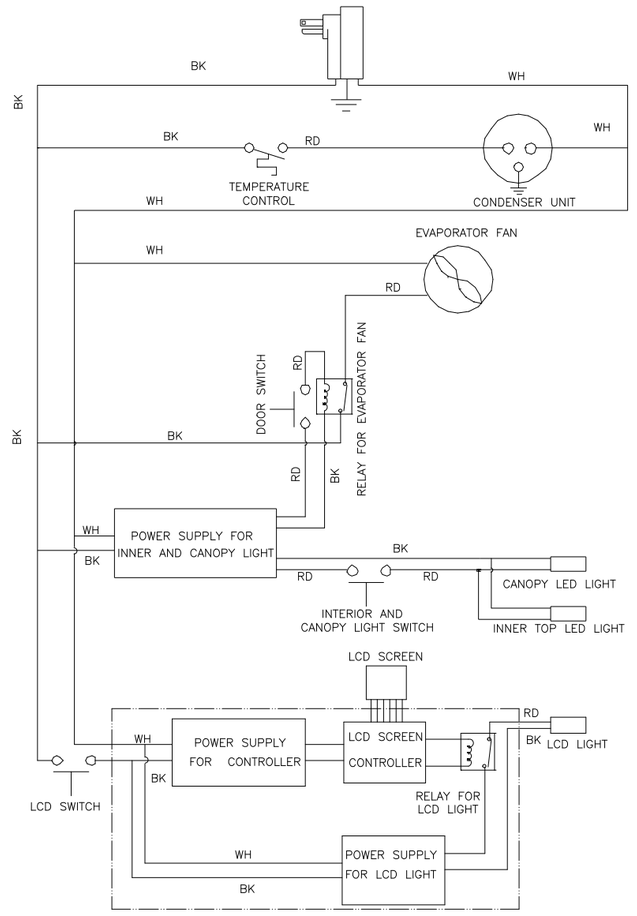

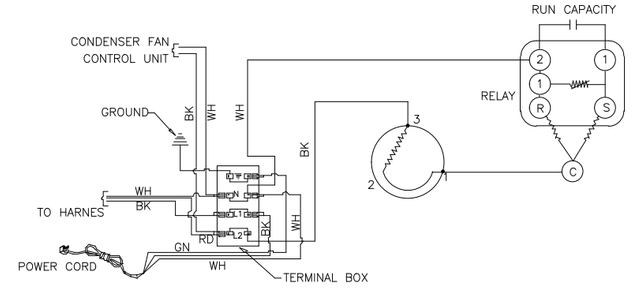



Innovative DisplayWorks, Inc.

To locate the distributor in your area go to: *http://www.idw.global/contact/#distributors*