G-Series Cooler
Instruction Manual

G-4.35/GCG-4.35

Models: Listed on Inside Cover



www.idw.global

G-Series Cooler
Instruction Manual

G-4.35/GCG-4.35

Models:
G- 4.35SS
GCG-4.35SS
G-4.35SS-N234B
GCG-4.35SS-N234B
G-4.35SS-B234B
GCG-4.35SS-B234B
GCG-4.35SS-2234B
GCG-4.35SS-B2234B
GCG-4.35SS-A234B
G-4.35SS-N234B-HC
GCG-4.35SS-N234B-HC
GCG-4.35SS-2234B-HC
GCG-4.35SS-B2234B
GCG-4.35SS-A234B-HC

Table of Contents

Parts & Identification Lists..... 4
Safety Instructions..... 5
Installation..... 6
- Cleaning..... 6
- Power Failure 6
- Light Replacement..... 6
- Moving The Cooler..... 6
- Drip Pan 6

Leveling..... 7
Shelving Installation 7
Interior Light Replacement..... 8
Door LED Light Replacement..... 8
Setting-up Spacer & Power Cord Holder 9
Startup, Operation & Temp. Adjustment..... 9
Maintenance 10
Troubleshooting..... 11
Specifications 12
Flammable Refrigerant Warnings 12
Circuit Diagrams 13
Wiring Diagrams 14/15

For Future Reference

- This easy-to-use manual will guide you in getting the best use of your cooler.
- Remember to record the model number and the serial number. This information can be found on the inside of your cooler.
- Keep your receipt with this manual for future warranty service.

Model #: _____

Serial #: _____

Date of Purchase: _____

PARTS & IDENTIFICATION

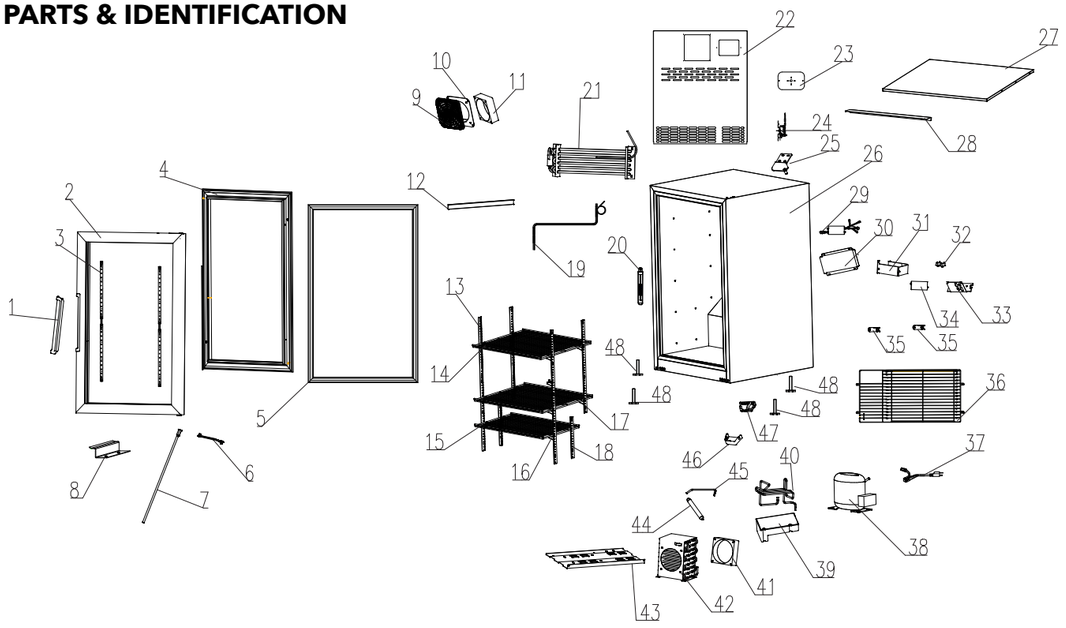

1. Door Handle
2. Glass Door
3. LED Light in the Glass Door
4. LED Light Cover
5. Door Gasket
6. Door Limiter
7. Door Self-Closing Rod
8. Door Support
9. Fan Guard
10. Fan Baseboard
11. Evaporator Fan
12. LED Light
13. Pilaster Strips (Long, 2)
14. Large Shelf (2)
15. Small Shelf
16. Shelf Clips (12)
17. Pilaster Strips (Middle, 2)
18. Pilaster Strips (Short, 2)
19. Return Pipe
20. Thermometer
21. Evaporator
22. Air Channel Panel
23. Thermostat Panel
24. Thermostat
25. Top Hinge
26. Cabinet
27. Top Stainless Steel Plate
28. Front Support Plate for Top Steel Plate
29. Power Supply Cover for Condenser Fan
30. Power Supply Cover
31. Electric Box Housing
32. Light Switch (2)
33. Switch Panel
34. Switching Power Supply of LED Light & Evaporator Fan
35. Bumper Block (2)
36. Compressor Guard
37. Power Cord
38. Compressor
39. Drip Pan
40. Connecting Tube for Condenser
41. Condenser Fan
42. Condenser
43. Compressor Baseboard
44. Filter Dryer
45. Connecting Tube for Filter Dryer
46. Lower Right Hinge Cover
47. Lower Right Hinge
48. Leveler (4)

SAFETY INSTRUCTIONS

1. When using this appliance, always follow the basic safety precautions:
2. Read the entire User's Manual before operating this appliance.
3. Use this appliance only for its intended purpose as described in this User's Manual.
4. This appliance must be properly installed in accordance with the installation instructions before being used.
5. IDW requires that a dedicated circuit be used for the unit. Failure to do so voids warranty.
6. Never unplug your cooler by pulling on the power cord. Always grasp the plug firmly and pull it straight out from the outlet.
7. Unplug your appliance before cleaning or making any repairs. ***Note: If for any reason this product requires service, we strongly recommend that a certified technician perform the service.***
8. When disconnecting the power source, wait at least 5 minutes to reconnect the power to avoid damage to the compressor and the cooling system.
9. Immediately repair or replace all electrical cords that have become frayed or otherwise damaged. Do not use a cord that shows cracks or abrasion damage along its length, the plug or the connector end.
10. Do not operate or store your appliance near or around explosive fumes, gasoline or other flammable vapors and liquids.
11. Do not use flammable liquids to clean unit.
12. Setting the temperature control to the 0 position does not remove power to the light circuit, perimeter heaters, or evaporator fans.
13. Do not adjust the temperature control. The temperature control is factory set for maximum performance.

PLEASE SAVE THESE INSTRUCTIONS!

DANGER!

PROPER DISPOSAL OF THE REFRIGERATOR

Pre-Caution, Non-Operating Coolers Should Have:

1. Door removed.
2. Shelves kept in place in order to prevent any small child from climbing inside cooler.

For Proper Disposal of Cooler:
Distributors/retailers need to contact a qualified service technician:

1. To recover all refrigerant from the cooler
2. To remove the compressor or remove the oil from the compressor

Then the distributor/retailer can contact their local metal recycling center to pick up the remaining cabinet, shelves, etc. By law, disposal of hazardous wastes may be subject to fines and imprisonment under the provisions of the environmental regulations. For more information please visit: *http://www.epa.gov/osw/hazard/index.htm*

INSTALLATION

Installation of the cooler must be done according to applicable local codes or equivalent.

Ambient Environment

- Place cooler on an even surface to reduce vibration and noise.
- To transport, do not tilt the cooler beyond a 45 degree angle.
- Do not place cooler in direct sunlight or near any heat sources.
- Do not place cooler in environment temperatures that exceed 80°F.
- Do not place cooler in below normal temperatures.
- Do not place cooler in extreme humid environments, this may cause components to rust.
- Do not place cooler near constant running or splattering water, this may cause immediate damage to refrigeration system.
- Must allow at least 4" between rear of cooler and wall for proper ventilation and heat dissipation of cooler.
- Do not place furniture or other articles with sharp edges near the cooler in order to prevent damage to the glass door.
- This cooler is for indoor use.
- Place unit in it's final location, making certain there is adequate ventilation in the room.

  WARNING: Warranty is void if ventilation is insufficient.

Preparation Prior to Operation

- Remove all packaging materials before using cooler. This includes: foam pedestal, adhesive tape (used to fix accessories) and protective gaskets.
- Inspect cooler for concealed damage. Immediately file a claim with the freight carrier if there is damage. IDW is not responsible for damage incurred during shipping.
- Cooler must remain unplugged in an upright position for 1 hour prior to use.
- Clean the interior surface with a soft cloth and lukewarm water before operation.
- Ensure that drain hose or hoses are positioned in the pan.
- Remove plug and cord from inside the lower rear of the cooler.
- The unit should be placed close enough to the electrical supply so that extension cords are not used.

Electrical Requirements

- This model operates with a 110-120V/60Hz power supply. Check the electrical outlet for proper voltage.
- Dedicate one outlet for the use of the cooler.
- Do not use an extension cord or any other multiple connectors as this can lead to compressor failure.
- If the cord is damaged, it must be replaced.
- For your safety, plug the unit into a grounded wall outlet. Please check with a certified electrician for details.

  WARNING: Do not use extension cords.
  WARNING: Compressor warranties are void if compressor burns out due to low voltage.
  WARNING: Power cord ground pin must NOT be removed!

LEVELING



- Set unit in its final location making certain there is adequate ventilation in the room.

  WARNING: Warranty is void if ventilation is insufficient.
- Proper leveling of the cooler is critical to it operating correctly. Condensation removal and door operation are both affected by leveling.
- The cooler should be leveled front to back and side to side with a level.
- Ensure the drain hose or hoses are positioned in the pan.
- Remove the plug and cord from inside the lower rear of the cooler.
- The unit should be placed close enough to the electrical supply so that extension cords are never used.

SHELVING INSTALLATION



Shelves are secured in place with zip ties. Cut zip ties to adjust shelves as desired.



Securely insert shelf clips into pilasters.



Shelf clips should be level so shelf lays flat.

(Maximum load per Large shelf is 53 lbs /24 kg)
(Maximum load per Small shelf is 33 lbs /15 kg)

Display refrigerators can be loaded within the shelf dimensions from the front to back side. They can also be loaded in any space from the bottom to the top interior cabinet. Do not allow product to block the evaporator fan cover because the evaporator fan helps the cooler to ventilate properly.

INTERIOR LIGHT REPLACEMENT

Instructions are as follows:

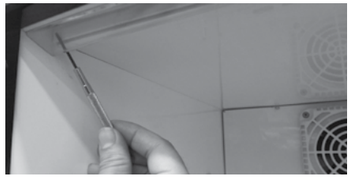

1 Using a small flathead screwdriver, pry off the plastic cover.



2 Disconnect the lights.



3 Unscrew all screws using a Phillip's screwdriver.



4 Remove LED light strand.



5 To install LED lights follow the above directions in reverse order.



DOOR LED LIGHT REPLACEMENT

1 Unplug Cooler

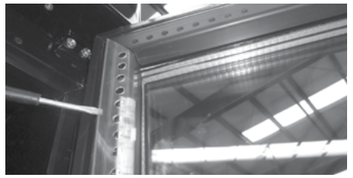

2 Remove plastic cover.



3 Disconnect top light strand.



4 Disconnect middle light strand.



5 Unscrew light strand.



6 Remove entire light strand.

7 To install LED lights follow the above directions in reverse order.

NOTE: If there are any malfunctions with the main control panel of LED lights, please contact a professional for replacement.

SETTING UP SPACERS & POWER CORD HOLDERS

These coolers are supplied with one set (2 pieces) of Spacers to hold the extra length of Power Cord.

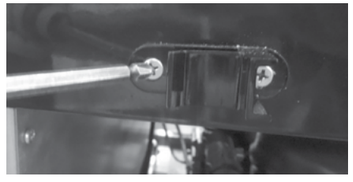

1 Take out the two Spacers and Screws supplied in the Accessory Pack shipped with the Cooler.



2 Use a Phillips screwdriver to secure the two Spacers onto the rear of the cooler.

START-UP, OPERATION AND TEMPERATURE ADJUSTMENT

Operation

Prior to stocking cooler with product, it should be operated empty for half an hour.

Temperature Adjustment

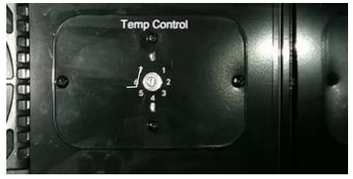

Performance tested position of the thermostat is between 4-6.

Switch Operation for Lit Door Logo





For GCG coolers only. The light switch located at the bottom left hand side, on the rear of the cabinet, is the ON/OFF switch for the Lit logo located on the door of cooler.

MAINTENANCE

Cleaning

- Before cleaning the appliance, always remember to unplug it.
- Unplug the cooler at the electrical outlet; never pull the service cord.
- Do not use sharp or pointed objects for cleaning.
- Clean the inside cabinet of the cooler with a clean damp cloth. Avoid damage by using non-abrasive and non-flammable cleaning products.
- Clean the condenser at least once a month with a vacuum cleaner or a brush to eliminate the dust accumulation.

Light Replacement

- Unplug the cooler before removing the LED light strip.
- Remove the screws.
- Remove the light cover gently.
- Take out the LED light strip.
- Replace the used strip with new equivalent light strip.
- Install the light cover and tighten the screws.
- Plug in the cooler.

Power Failure

- Please minimize the frequency of opening the door during a power failure.
- If your cooler is unused for an extended period of time, unplug, empty, and clean your cooler and keep the door open to avoid condensation, formation of mold, or odors.

Moving The Cooler

- Empty the unit.
- Secure all loose parts inside the cooler.
- Tape the door shut.
- During transportation, make sure that the cooler is in an upright position.

Drip Pan

- During normal compressor cycle, water will drain into the drain pan and evaporate.
- To clean, gently pull the drain pan towards you and remove. Slowly reinstall it after cleaning.

TROUBLESHOOTING

The following are NOT malfunctions:

Situation	Causes
Liquid flowing noise within cooler	• This is the sound of the cooling agent flowing through the pipes.
Refrigeration system is shutdown for longer periods of time while temperature inside is still very low	• This refrigerator is well insulated and can maintain a relatively ambient temperature.
Condensation on door/lid	• This may be due to a high indoor humidity or the cooler's temperature is set too low. Wipe the door dry with a towel.

1 This refrigerator has been designed and manufactured according to National standards. If there are any questions during use, refer to this operation manual to help troubleshoot problems.

2 When disposing of the cooler, please remove the door/lid and lock assembly to avoid children accidentally becoming trapped inside the cooler.

Prior to calling service, check the following:

Issues	Solutions
Cooler is not working properly	Please check power supply: • Check the electrical outlet for power, and that the plug is properly inserted. • Check to see if the circuit breaker is tripped or the fuse is blown. • Check if the condenser is free of dirt and debris. • Check for low voltage
Cooler is not keeping product cool	• Provide ample space between all products to ensure proper circulation of air. • Keep unit away from direct sunlight or other heating source. • Keep the door closed as often as possible. • Be certain the cooler is not touching external objects or walls.
Excessive noise	• Be certain the cooler is placed on a level surface. • Be certain the cooler is not touching external objects or walls.
Compressor turns on and off frequently	• The room temperature is higher than normal. • The door is not closed completely. • The door gasket is not sealed properly. • There is insufficient clearance around the cooler. • The thermostat is not set properly. • The frequency of cycling will be reduced when all of the product reaches the set temperature.

AFTER SALES SERVICE

Any product has the possibility of malfunction. Please observe the cooler's operation and any changes to product being stored. If there are any abnormal cases, refer to the table below. If there is still no change after following the below instructions, please inform our service center in a timely manner to avoid a further loss of the unit.

Information to provide to your qualified service professional:

- Serial number from the interior wall of the cooler
- Coolers' installation address and contact information
- Installation location hours and operation
- Nature of problem
- Any reports of power interruptions
- Recent service or maintenance completed on the cooler
- Has the cooler been relocated from original installation location
- Clear access to the cooler
- Coolers' instruction manual

SPECIFICATIONS

MODEL	VOLUME(L)	RATED VOLTAGE	RATED CURRENT	LAMP INPUT POWER	REFRIGERANT
G- 4.35SS G-4.35SS-N234B G-4.35SS-B234B G-4.35SS-N234B-HC	4.6ft³/ 130.25 L	110-120V/60Hz	2A	7W	R600/30g
GCG-4.35SS GCG-4.35SS-N234B GCG-4.35SS-B234B GCG-4.35SS-2234B GCG-4.35SS-B2234B GCG-4.35SS-N234B-HC GCG-4.35SS-2234B-HC GCG-4.35SS-B2234B				10.5W	
GCG-4.35SS-A234B GCG-4.35SS-A234B-HC				14.5W	
NSF/ASNI-7: Type II Display Refrigerator	A display refrigerator intended for use in an area where the environmental conditions are controlled and maintained so that the ambient temperature does not exceed 80°F (27°C).				

CAUTION FLAMMABLE REFRIGERANT

- **DANGER – Risk Of Fire Or Explosion.** Flammable Refrigerant Used. To Be Repaired Only By Trained Service Personnel. Do Not Puncture Refrigerant Tubing.
- **CAUTION – Risk Of Fire Or Explosion.** Flammable Refrigerant Used. Consult Repair Manual/Owner's Guide Before Attempting To Install or Service This Product. All Safety Precautions Must be Followed.
- **CAUTION – Risk Of Fire Or Explosion.** Dispose Of Properly In Accordance With Federal Or Local Regulations. Flammable Refrigerant Used.
- **CAUTION – Risk Of Fire Or Explosion** Due To Puncture Of Refrigerant Tubing; Follow Handling Instructions Carefully. Flammable Refrigerant Used.
- **CAREFUL** - Handling, moving and operating of the refrigerator or freezer to avoid either damaging the refrigerant tubing, or increasing the risk of a leak.
- **CAUTION** - Component parts shall be replaced with like components and that servicing shall be done by factory authorized service personnel, so as to minimize the risk of possible ignition due to incorrect parts or improper service.

G-4.35 CIRCUIT DIAGRAM

For models: G- 4.35SS, G-4.35SS-N234B, G-4.35SS-B234B, G-4.35SS-N234B-HC

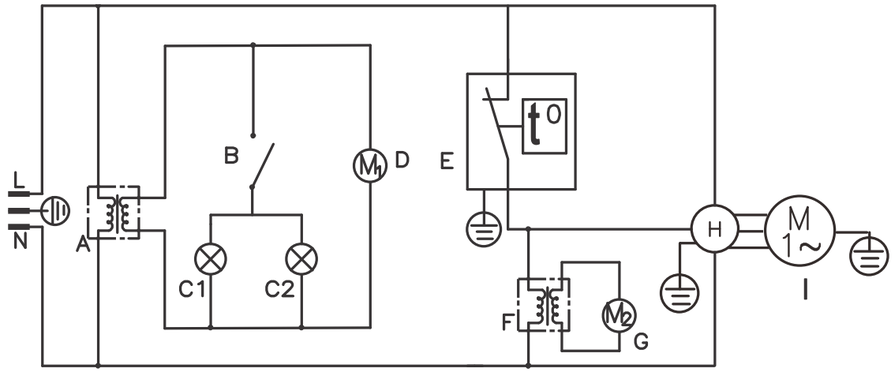

A: Power Supply for LED Lights & Evaporator Fan
B: On/Off Switch for Interior Light
C1: Interior Top LED Light
C2: Door Side LED Light
D: Evaporator Fan
E: Thermostat
F: Power Supply for Condenser Fan
G: Condenser Fan
H: Overload for Compressor
I: Compressor

GCG-4.35 CIRCUIT DIAGRAM

For models: GCG-4.35SS, GCG-4.35SS-N234B, GCG-4.35SS-B234B, GCG-4.35SS-2234B, GCG-4.35SS-B2234B, GCG-4.35SS-A234B, GCG-4.35SS-N234B-HC, GCG-4.35SS-2234B-HC, GCG-4.35SS-B2234B, GCG-4.35SS-A234B-HC

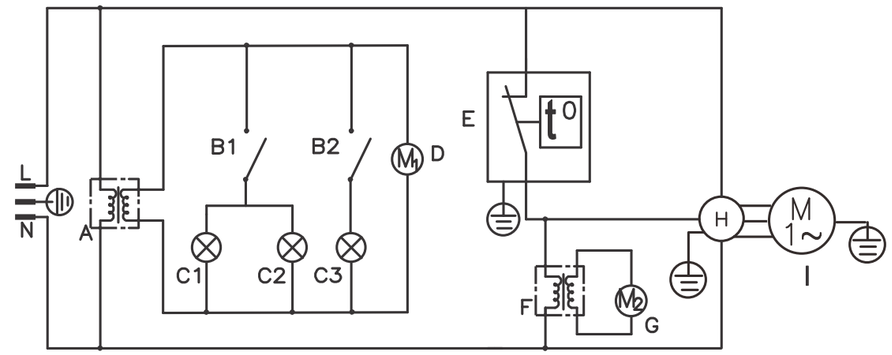

A: Power Supply for LED Lights & Evaporator Fan
B1: On/Off Switch for Interior Light
B2: On/Off Switch for Lit Door Logo
C1: Interior Top LED Light
C2: Door Side LED Light
C3: Door Logo LED Light
D: Evaporator Fan
E: Thermostat
F: Power Supply for Condenser Fan
G: Condenser Fan
H: Controller for Compressor
I: Compressor

G-4.35 ELECTRICAL WIRING DIAGRAM

For models: G- 4.35SS, G-4.35SS-N234B, G-4.35SS-B234B, G-4.35SS-N234B-HC

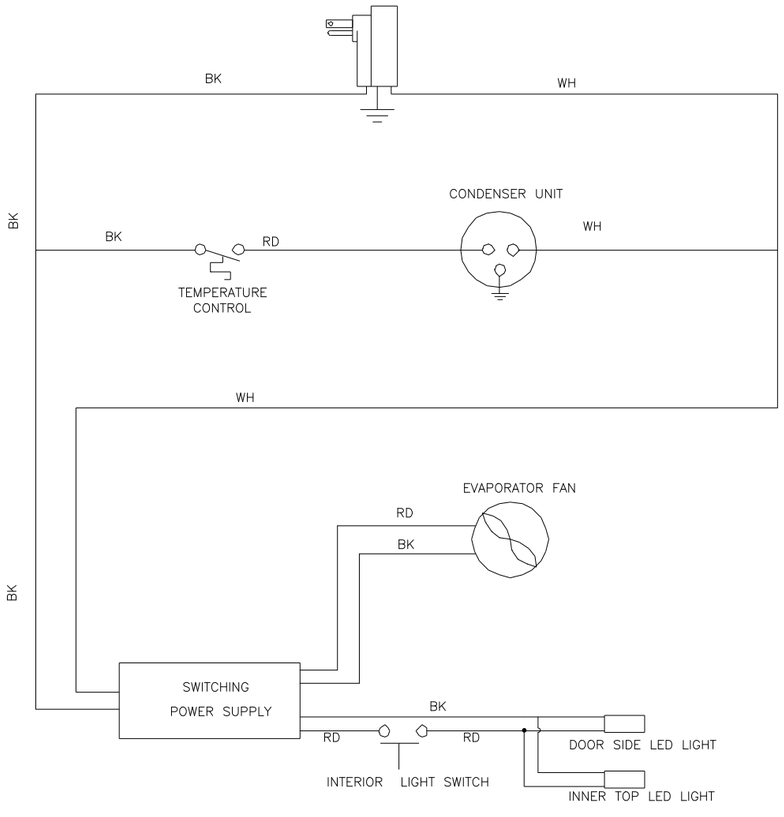

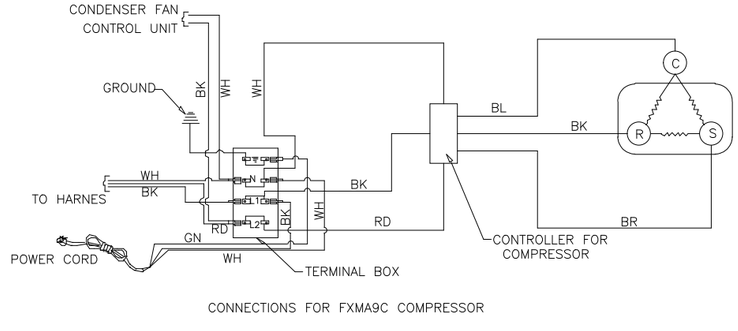

CONNECTIONS FOR FXMA9C COMPRESSOR

GCG-4.35 ELECTRICAL WIRING DIAGRAM

For models: GCG-4.35SS, GCG-4.35SS-N234B, GCG-4.35SS-B234B, GCG-4.35SS-2234B, GCG-4.35SS-B2234B, GCG-4.35SS-A234B, GCG-4.35SS-N234B-HC, GCG-4.35SS-2234B-HC, GCG-4.35SS-B2234B, GCG-4.35SS-A234B-HC

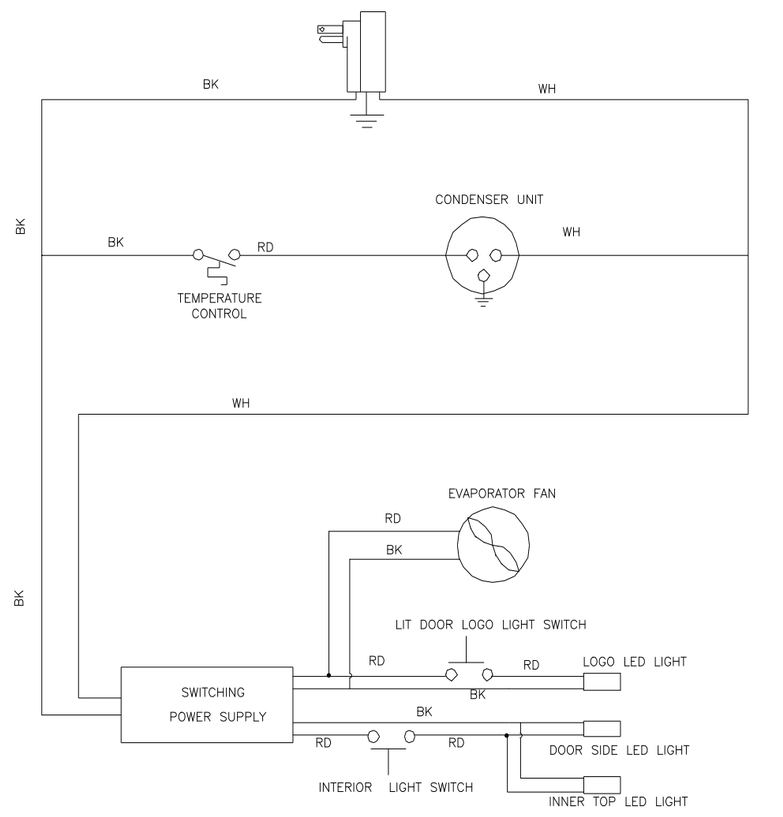

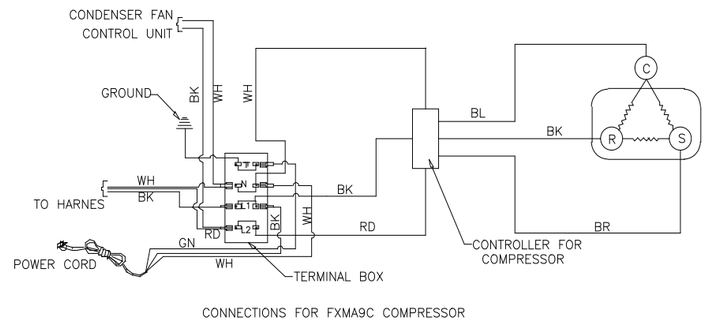

CONNECTIONS FOR FXMA9C COMPRESSOR



Innovative DisplayWorks, Inc.

To locate the distributor in your area go to: *http://www.idw.global/contact/#distributors*